Quickie T45

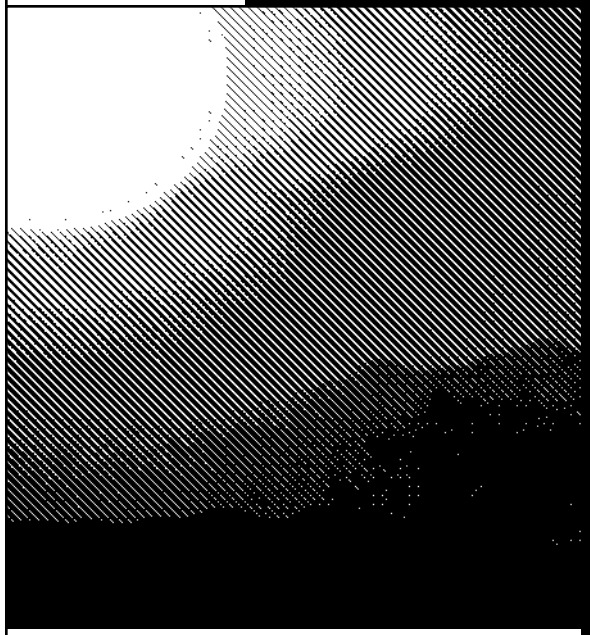

User Instruction Manual & Warranty

SUPPLIER:
THIS MANUAL MUST BE GIVEN TO THE RIDER OF THIS WHEELCHAIR.

RIDER:
BEFORE USING THIS WHEELCHAIR READ THIS ENTIRE MANUAL AND SAVE FOR FUTURE REFERENCE.

SUNRISE MEDICAL®

SUNRISE LISTENS

Thank you for choosing a Quickie wheelchair. We want to hear your questions or comments about this manual, the safety and reliability of your chair, and the service you receive from your supplier. Please feel free to write or call us at the address and telephone number below:

Sunrise Healthcare Group
Mobility Products Division
Customer Service Department
7477 East Dry Creek Parkway
Longmont, CO 80503
(303) 218-4500

Let us know your address. This will allow us to keep you up to date with information about safety, new products and options to increase your use and enjoyment of this wheelchair.

FOR ANSWERS TO YOUR QUESTIONS

Your authorized supplier knows your wheelchair best, and can answer most of your questions about chair safety, use and maintenance. For future reference, fill in the following:

Supplier: _____

Address: _____

_____

Telephone: _____

Serial #: _____ **Date/Purchased:** _____

I. **INTRODUCTION** 3
a. Sunrise Listens 3
II. **TABLE OF CONTENTS** 4
III. **YOUR CHAIR AND ITS PARTS** 6
IV. **NOTICE - READ BEFORE USE** 8
a. Choose the Right Chair & Safety Option 8
b. Review this Manual Often 8
c. Warnings 8
V. **GENERAL WARNINGS** 9
a. Weight Limit 9
b. Weight Training 9
c. Getting to Know Your Chair 9
d. To Reduce The Risk of an Accident 9
e. Safety Checklist 10
f. Changes & Adjustments 10
g. Environmental Conditions 10
h. Terrain 11
i. Street Use 11
j. Motor Vehicle Safety 11
k. When You Need Help 12
VI. **WARNINGS: FALLS & TIP-OVERS** 13
a. Center of Balance 13
b. Dressing or Changing Clothes 13
c. Wheelies 14
d. Obstacles 14
e. Reaching or Leaning 15
f. Moving Backward 15
g. Ramps, Slopes & Side Hills 16
h. Transfers 17
i. Curbs & Steps 17
j. Stairs 18
k. Escalators 18
VII. **WARNINGS: FOR SAFE USE** 19
a. Learning to do a "Wheelie" 19
b. Descending a Curb or Single Step 19
c. Climbing a Curb or Single Step 20
d. Climbing Stairs 20
e. Descending Stairs 20
f. Maintenance 21
VIII. **WARNINGS: COMPONENTS & OPTIONS** 22
a. Anti-Tip Tubes 22
b. Armrests 22
c. Cushion & Sling Seats 22

d. Fasteners 23
e. Footrests 23
f. Pneumatic Tires 23
g. Positioning Belts 24
h. Power Drive 24
i. Push Handles 24
j. Quick-Release Axles 25
k. Rear Axles 25
l. Rear Wheel Locks 25
m. Modified Seat Systems 26
n. Upholstery Fabric 26
IX. **SET-UP AND ADJUSTMENTS** 27
a. Swing-Away Footrests 27
b. Heavy-Duty, Lift-Off Footrests (Optional) 27
c. Articulating Legrest (Optional) 28
d. Elevating Legrest (Optional) 28
e. Casters 28
f. Dual-Post, Height Adjustable Armrests 29
g. Adjustable Locking Flip-up Armrests (Optional) 29
h. Anti-Tip Tubes 30
i. Tilt-in Space Mechanism 31
j. Dual Trigger Reclining Mechanism 31
k. Fixed/Adjustable Backrest 32
l. Stroller Handles (Optional) 32
m. Wheel Locks 33
n. Check Out 33
X. **TROUBLESHOOTING** 34
XI. **MAINTENANCE** 35
XII. **SUNRISE LIMITED WARRANTY** 37

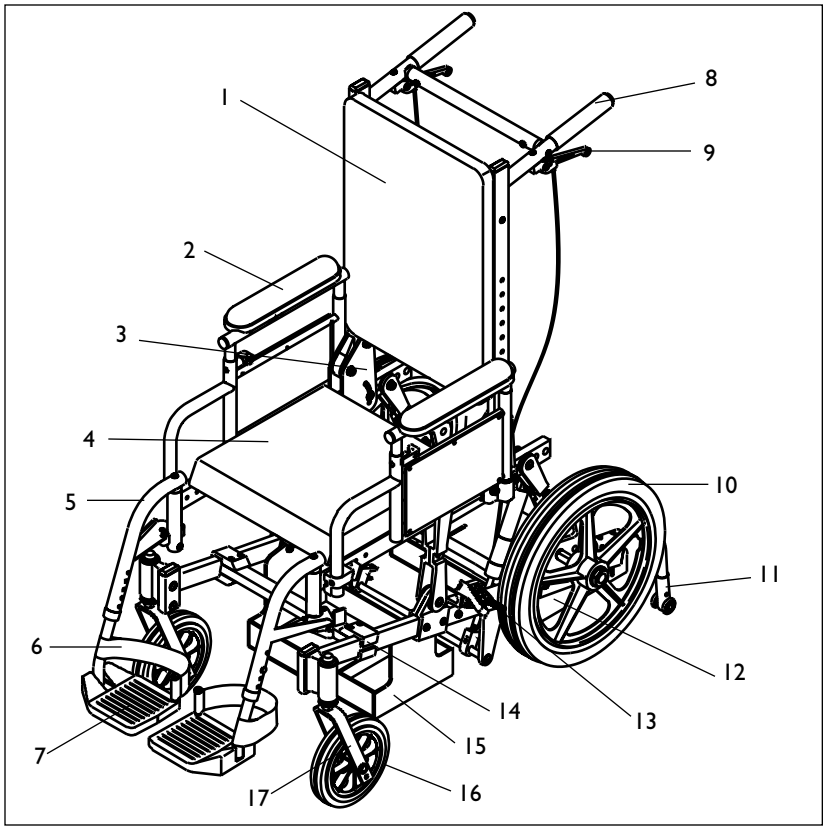

Quickie T45

1. Backrest
2. Dual-post, height-adjustable armrest
3. Backrest pivot plate
4. Cushion
5. Swing-away footrest
6. Heel loop
7. Composite footplate
8. Push handle
9. Tilt-in-space mechanism release lever
10. 16" rear wheel
11. Anti-tip tube
12. Vent tray
13. Wheel lock
14. Swing-away release latch
15. Battery tray
16. Caster tire
17. Caster fork

Weight
75 lbs.

Frame Dimensions
Frame width: 14"-20"
Seat depth: regular frame (15"-17"), long frame (18"-20")
Cushion: Opt - 2", 3", 4"

Seat
Std - seat pan

Tilt Mechanism
Std - std (90 pound assist)
Opt - heavy-duty (135 pound assist)

Solid Back/Seat
24" back height

Backrest
Std: fixed/adjustable
Opt: reclining, stroller handles

Vent Tray
Opt - vent tray with battery box

Footrests
Hanger type:
Std - 60°, 70° swing-away
Opt -70°, 80° heavy duty, articulating or elevating legrest
Impact guards: plastic or neoprene
Footplates:
Std - composite
Opt - angle-adjustable, extended, heel loops, toe loops
Footrest extension tubes:
Std - short, medium, long
Opt - Extensions: 2", 4"

Casters
Std - 8" pneumatic
Opt - 8" polyurethane, 8"x2" pneumatic, 8"x2" w/airless insert, aluminum caster rims

Armrests
Opt - dual-post, height-adjustable, adjustable locking flip-up

Rear Wheels
Type: Std - mag
Sizes: Std - 16", Opt - 20"
Tires: Std - pneumatic
Opt - 20" pneumatic with airless insert, full-profile polyurethane

Wheel Locks
Std - wheel locks

All features may not be available with some chair setups or in conjunction with another chair feature. Please consult your authorized supplier for more information. Your authorized supplier can also provide you with more information on accessories and clothing.

A. CHOOSE THE RIGHT CHAIR & SAFETY OPTIONS

Sunrise provides a choice of many wheelchair styles to meet the needs of the wheelchair rider. However, final selection of the type of wheelchair, options and adjustments rests solely with you and your health care advisor. Choosing the best chair and set-up for your safety depends on such things as:

1. Your disability, strength, balance and coordination.
2. The types of hazards you must overcome in daily use (where you live and work, and other places you are likely to use your chair).
3. The need for options for your safety and comfort (such as anti-tip tubes, positioning belts, or special seating systems).

B. REVIEW THIS MANUAL OFTEN

Before using this chair you, and each person who may assist you, should read this entire manual and make sure to follow all instructions. Review the warnings often, until they are second nature to you.

C. WARNINGS

The word **"WARNING"** refers to a hazard or unsafe practice that may cause **severe injury or death** to you or to other persons. The "Warnings" are in four main sections, as follows:

1. V — GENERAL WARNINGS

Here you will find a safety checklist and a summary of risks you need to be aware of before you ride this chair.

2. VI — WARNINGS — FALLS & TIP-OVERS

Here you will learn how to avoid a fall or tip-over while you perform daily activities in your chair.

3. VII — WARNINGS — FOR SAFE USE

Here you will learn about practices for the safe use of your chair

4. VIII — WARNINGS — COMPONENTS & OPTIONS

Here you will learn about the components of your chair and options you can select for safety. Consult your authorized supplier and your health care advisor to help you choose the best set-up and options for safe use.

Note: Where they apply, you will also find "Warnings" in other sections of this manual. Heed all warnings in this section. If you fail to do so a fall, tip-over or loss of control may occur and cause severe injury to the rider or others.

A. WEIGHT LIMIT

⚠ WARNING

NEVER exceed the weight limit of 250 pounds (113.6 kilograms), for combined weight of rider and items carried. If you do exceed the limit, damage to your chair, a fall, tip-over or loss of control may occur and cause severe injury to the rider or others.

B. WEIGHT TRAINING

⚠ WARNING

NEVER use this chair for weight training if total weight (rider plus equipment) exceeds 250 pounds. If you do exceed the limit, damage to your chair, a fall, tip-over or loss of control may occur and cause severe injury to the rider or others.

C. GETTING TO KNOW YOUR CHAIR

⚠ WARNING

Every wheelchair is different. Take the time to learn the feel of this chair before you begin riding. Start slowly, with easy, smooth strokes. If you are used to a different chair, you may use too much force and tip over. If you use too much force, damage to your chair, a fall, tip-over or loss of control may occur and cause severe injury to the rider or others.

D. TO REDUCE THE RISK OF AN ACCIDENT

⚠ WARNING

1. BEFORE riding, you should be trained in the safe use of this chair by your health care advisor.
2. Practice bending, reaching and transfers until you know the limit of your ability. Have someone help you until you know what can cause a fall or tip-over and how to avoid doing so.
3. Be aware that you must develop your own methods for safe use best suited to your level of function and ability.
4. NEVER try a new maneuver on your own until you are sure you can do it safely.
5. Get to know the areas where you plan to use your chair. Look for hazards and learn how to avoid them.
6. Use anti-tip tubes unless you are a skilled rider of this chair and are sure you are not at risk to tip over.

If you fail to heed these warnings damage to your chair, a fall, tip-over or loss of control may occur and cause severe injury to the rider or others.

E. SAFETY CHECKLIST

⚠ WARNING

Before Each Use Of Your Chair:

1. Make sure the chair rolls easily and that all parts work smoothly. Check for noise, vibration, or a change in ease of use. (They may indicate low tire pressure, loose fasteners, or damage to your chair).
2. Repair any problem. Your authorized supplier can help you find and correct the problem.
3. Check to see that both quick-release rear axles are locked. When locked, the axle button will "pop out" fully. If not locked, the wheel may come off and cause you to fall.
4. If your chair has anti-tip tubes, lock them in place.

Note: See "Anti-Tip Tubes" (Section VIII) for times you should not use them.

If you fail to heed these warnings damage to your chair, a fall, tip-over or loss of control may occur and cause severe injury to the rider or others.

F. CHANGES & ADJUSTMENTS

⚠ WARNING

1. If you modify or adjust this chair, it may increase the risk of a tip-over UNLESS you make other changes as well.
2. Consult your authorized supplier BEFORE you modify or adjust your chair.
3. We recommend that you use anti-tip tubes until you adapt to the change, and are sure you are not at risk to tip over.
4. Unauthorized modifications or use of parts not supplied or approved by Sunrise may change the chair structure. This will void the warranty and may cause a safety hazard.

If you fail to heed these warnings damage to your chair, a fall, tip-over or loss of control may occur and cause severe injury to the rider or others.

G. ENVIRONMENTAL CONDITIONS

⚠ WARNING

1. Use extra care if you must ride your chair on a wet or slick surface. If you are in doubt, ask for help.
2. Contact with water or excess moisture may cause your chair to rust or corrode. This could cause your chair to fail.
   a. Do not use your chair in a shower, pool or other body of water. The chair tubing and parts are not water-tight and may rust or corrode from the inside.
   b. Avoid excess moisture (for example, do not leave your chair in a damp bathroom while taking a shower).
   c. Dry your chair as soon as you can if it gets wet, or if you use water to clean it.

If you fail to heed these warnings damage to your chair, a fall, tip-over or loss of control may occur and cause severe injury to the rider or others.

H. TERRAIN

⚠ WARNING

1. Your chair is designed for use on firm, even surfaces such as concrete, asphalt and indoor floors and carpeting.
2. Do not operate your chair in sand, loose soil or over rough terrain. This may damage wheels or axles, or loosen fasteners of your chair.

If you fail to heed these warnings damage to your chair, a fall, tip-over or loss of control may occur and cause severe injury to the rider or others.

I. STREET USE

⚠ WARNING

In most states, wheelchairs are not legal for use on public roads. Be alert to the danger of motor vehicles on roads or in parking lots.

1. At night, or when lighting is poor, use reflective tape on your chair and clothing.
2. Due to your low position, it may be hard for drivers to see you. Make eye contact with drivers before you go forward. When in doubt, yield until you are sure it is safe.

If you fail to heed these warnings damage to your chair, a fall, tip-over or loss of control may occur and cause severe injury to the rider or others.

J. MOTOR VEHICLE SAFETY

⚠ WARNING

Quickie wheelchairs do not meet federal standards for motor vehicle seating.

1. NEVER let anyone sit in this chair while in a moving vehicle.
   a. ALWAYS move the rider to an approved vehicle seat.
   b. ALWAYS secure the rider with proper motor vehicle restraints.
2. In an accident or sudden stop the rider may be thrown from the chair. Wheelchair seat belts will not prevent this, and further injury may result from the belts or straps.
3. NEVER transport this chair in the front seat of a vehicle. It may shift and interfere with the driver.
4. ALWAYS secure this chair so that it cannot roll or shift.
5. Do not use any chair that has been involved in a motor vehicle accident.

If you fail to heed these warnings damage to your chair, a fall, tip-over or loss of control may occur and cause severe injury to the rider or others.

K. WHEN YOU NEED HELP

⚠ WARNING

For The Rider:

Make sure that each person who helps you reads and follows all warnings and instructions that apply.

For Attendants:

1. Work with the rider's doctor, nurse or therapist to learn safe methods best suited to your abilities and those of the rider.
2. Tell the rider what you plan to do, and explain what you expect the rider to do. This will put the rider at ease and reduce the risk of an accident.
3. Make sure the chair has push handles. They provide secure points for you to hold the rear of the chair to prevent a fall or tip-over. Check to make sure push handle grips will not rotate or slip off.
4. To prevent injury to your back, use good posture and proper body mechanics. When you lift or support the rider or tilt the chair, bend your knees slightly and keep your back as upright and straight as you can.
5. Remind the rider to lean back when you tilt the chair backward.
6. When you descend a curb or single step, slowly lower the chair in one easy movement. Do not let the chair drop the last few inches to the ground. This may damage the chair or injure the rider.
7. To avoid tripping, unlock and rotate anti-tip tubes up, out of the way. ALWAYS lock the rear wheels and lock anti-tip tubes in place if you must leave the rider alone, even for a moment. This will reduce the risk of a tip over or loss of control of the chair.

If you fail to heed these warnings damage to your chair, a fall, tip-over or loss of control may occur and cause severe injury to the rider or others.

A. CENTER OF BALANCE

⚠ WARNING

The point where this chair will tip forward, back, or to the side depends on its center of balance and stability. How your chair is set up, the options you select and the changes you make may affect the risk of a fall or tip-over.

1. The Most Important Adjustments Are:
   a. The position of the rear wheels. The more you move the rear wheels forward, the more likely your chair will tip over backward.
2. The Center Of Balance Is Also Affected By:
   a. A change in the set-up of your chair, including:
      - The distance between the rear wheels.
      - The amount of rear wheel camber.
      - The seat height and seat angle.
      - Backrest angle.
   b. A change in your body position, posture or weight distribution.
   c. Riding your chair on a ramp or slope.
   d. The use of a back pack or other options, and the amount of added weight.
3. To Reduce The Risk Of An Accident:
   a. Consult your doctor, nurse or therapist to find out what axle and caster position is best for you.
   b. Consult your authorized supplier BEFORE you modify or adjust this chair. Be aware that you may need to make other changes to correct the center of balance.
   c. Have someone help you until you know the balance points of your chair and how to avoid a tip-over.
   d. Use anti-tip tubes.

If you fail to heed these warnings damage to your chair, a fall, tip-over or loss of control may occur and cause severe injury to the rider or others.

B. DRESSING OR CHANGING CLOTHES

⚠ WARNING

Your weight may shift if you dress or change clothes while seated in this chair. To reduce the risk of a fall or tip-over:

1. Rotate the front casters until they are as far forward as possible. This makes the chair more stable.
2. Lock anti-tip tubes in place. (If your chair does not have anti-tip tubes, back it up against a wall and lock both rear wheels).

If you fail to heed these warnings damage to your chair, a fall, tip-over or loss of control may occur and cause severe injury to the rider or others.

C. WHEELIES

⚠ WARNING

Doing a "wheelie" means: balancing on the rear wheels of your chair, while the front casters are in the air. It is dangerous to do a "wheelie" as a fall or tip-over may occur. However, if you do it safely, a "wheelie" can help you overcome curbs and obstacles.

1. Consult your doctor, nurse or therapist to find out if you are a good candidate to learn to do a "wheelie."
2. Do not attempt a "wheelie" UNLESS you are a skilled rider of this chair, or you have help.

Note: See p. 19 for steps to learn to do a "wheelie."

If you fail to heed these warnings damage to your chair, a fall, tip-over or loss of control may occur and cause severe injury to the rider or others.

D. OBSTACLES

⚠ WARNING

Obstacles and road hazards (such as potholes and broken pavement) can damage your chair and may cause a fall, tip-over or loss of control.

To avoid these risks:

1. Keep a lookout for danger – scan the area well ahead of your chair as you ride.
2. Make sure the floor areas where you live and work are level and free of obstacles.
3. Remove or cover threshold strips between rooms.
4. Install a ramp at entry or exit doors. Make sure there is not a drop off at the bottom of the ramp.
5. To Help Correct Your Center Of Balance:
   a. Lean your upper body FORWARD slightly as you go UP over an obstacle.
   b. Press your upper body BACKWARD as you go DOWN from a higher to a lower level.
6. If your chair has anti-tip tubes, lock them in place before you go UP over an obstacle.
7. Keep both of your hands on the handrims as you go over an obstacle.
8. Never push or pull on an object (such as furniture or a doorjamb) to propel your chair.

If you fail to heed these warnings damage to your chair, a fall, tip-over or loss of control may occur and cause severe injury to the rider or others.

E. REACHING OR LEANING

⚠ WARNING

If you reach or lean it will affect the center of balance of your chair. This may cause you to fall or tip over. When in doubt, ask for help or use a device to extend your reach.

1. NEVER reach or lean if you must shift your weight sideways or rise up off the seat.
2. NEVER reach or lean if you must move forward in your seat to do so. Always keep your buttocks in contact with the backrest.
3. NEVER reach with both hands (you may not be able to catch yourself to prevent a fall if the chair tips).
4. NEVER reach or lean to the rear unless your chair has anti-tip tubes locked in place.
5. DO NOT reach or lean over the top of the seat back. This may damage one or both backrest tubes and cause you to fall.
6. If You Must Reach Or Lean:
   a. Do not lock the rear wheels. This creates a tip point and makes a fall or tip-over more likely.
   b. Do not put pressure on the footrests.

Note: Leaning forward puts pressure on the footrests and may cause the chair to tip if you lean too far.

   c. Move your chair as close as you can to the object you wish to reach.
   d. Do not try to pick up an object from the floor by reaching down between your knees. You are less likely to tip if you reach to the side of your chair.
   e. Rotate the front casters until they are as far forward as possible. This makes the chair more stable.

Note: To do this: Move your chair past the object you want to reach, then back up alongside it. Backing up will rotate the casters forward.

   f. Firmly grasp a rear wheel or an armrest with one hand. This will help to prevent a fall if the chair tips.

If you fail to heed these warnings damage to your chair, a fall, tip-over or loss of control may occur and cause severe injury to the rider or others.

F. MOVING BACKWARD

⚠ WARNING

Use extra care when you move your chair backward. Your chair is most stable when you propel yourself forward. You may lose control or tip over if one of the rear wheels hits an object and stops rolling.

1. Propel your chair slowly and smoothly.
2. If your chair has anti-tip tubes, make sure to lock them in place.
3. Stop often and check to be sure your path is clear.

If you fail to heed these warnings damage to your chair, a fall, tip-over or loss of control may occur and cause severe injury to the rider or others.

G. RAMPS, SLOPES & SIDE HILLS

⚠ WARNING

Riding on a slope, which includes a ramp or side hill, will change the center of balance of your chair. Your chair is less stable when it is at an angle. Anti-tip tubes may not prevent a fall or tip-over.

1. Do not use your chair on a slope steeper than 10%. (A 10% slope means: one foot in elevation for every ten feet of slope length.)
2. Always go as straight up and as straight down as you can. (Do not "cut the corner" on a slope or ramp.)
3. Do not turn or change direction on a slope.
4. Always stay in the CENTER of the ramp. Make sure ramp is wide enough that you are not at risk that a wheel may fall over the edge.
5. Do not stop on a steep slope. If you stop, you may lose control of your chair.
6. NEVER use rear wheel locks to try to slow or stop your chair. This is likely to cause your chair to veer out of control.
7. Beware Of:
   a. Wet or slippery surfaces.
   b. A change in grade on a slope (or a lip, bump or depression). These may cause a fall or tip-over.
   c. A drop-off at the bottom of a slope. A drop-off of as small as 3/4 inch can stop a front caster and cause the chair to tip forward.
8. To Reduce The Risk Of A Fall Or Tip-Over:
   a. Lean or press your body UPHILL. This will help adjust for the change in the center of balance caused by the slope or side hill.
   b. Keep pressure on the handrims to control your speed on a down slope. If you go too fast you may lose control.
   c. Ask for help any time you are in doubt.
9. Ramps At Home & Work - For your safety, ramps at home and work must meet all legal requirements for your area. We recommend:
   a. Width. At least four feet wide.
   b. Guardrails. To reduce the risk of a fall, sides of ramp must have guardrails (or raised borders at least three inches high).
   c. Slope. Not more than a 10% grade.
   d. Surface. Flat and even, with a thin carpet or other non-skid material. (Make sure there is no lip, bump or depression.)
   e. Bracing. Ramp must be STURDY. You may need bracing so ramp does not "bow" when you ride on it.
   f. Avoid A Drop Off. You may need a section at the top or bottom to smooth out the transition.

If you fail to heed these warnings damage to your chair, a fall, tip-over or loss of control may occur and cause severe injury to the rider or others.

H. TRANSFER

⚠ WARNING

It is dangerous to transfer on your own. It requires good balance and agility. Be aware that there is a point during every transfer when the wheelchair seat is not below you. To Avoid A Fall:

1. Work with your health care advisor to learn safe methods.
   a. Learn how to position your body and how to support yourself during a transfer.
   b. Have someone help you until you know how to do a safe transfer on your own.
2. Lock the rear wheels before you transfer. This keeps the rear wheels from rolling.
   Note: This will NOT keep your chair from sliding away from you or tipping.
3. Make sure to keep pneumatic tires properly inflated. Low tire pressure may allow the rear wheel locks to slip.
4. Move your chair as close as you can to the seat you are transferring to. If possible, use a transfer board.
5. Rotate the front casters until they are as far forward as possible.
6. If you can, remove or swing footrests out of the way.
   a. Make sure your feet do not catch in the space between the footrests.
   b. Avoid putting weight on the footrests as this may cause the chair to tip.
7. Make sure armrests are out of the way and do not interfere.
8. Transfer as far back onto the seat surface as you can. This will reduce the risk that the chair will tip or move away from you.

If you fail to heed these warnings damage to your chair, a fall, tip-over or loss of control may occur and cause severe injury to the rider or others.

I. CURBS & STEPS

⚠ WARNING

1. Each person who helps you should read and follow the warnings "For Safe Use" (Section VII).
2. Do not try to climb or descend a curb or step alone UNLESS you are a skilled rider of this chair and:
   a. You can safely do a "wheelie"; and
   b. You are sure you have the strength and balance to do so.
3. Unlock and rotate anti-tip tubes up, out of the way, so they do not interfere.
4. Do not try to climb a high curb or step (more than 4 inches high) UNLESS you have help. Doing so may cause your chair to exceed its balance point and tip over.
5. Go straight up and straight down a curb or step. If you climb or descend at an angle, a fall or tip-over is likely.
6. Be aware that the impact of dropping down from a curb or step can damage your chair or loosen fasteners.

If you fail to heed these warnings damage to your chair, a fall, tip-over or loss of control may occur and cause severe injury to the rider or others.

J. STAIRS

⚠ WARNING

1. NEVER use this chair on stairs UNLESS you have someone to help you. Doing so is likely to cause a fall or tip-over.
2. Persons who help you should read and follow the warnings "For Attendants" (p. 12), and the "For Safe Use" (Section VII).

If you fail to heed these warnings damage to your chair, a fall, tip-over or loss of control may occur and cause severe injury to the rider or others.

K. ESCALATORS

⚠ WARNING

NEVER use this chair on an escalator, even with an attendant. If you do, a fall or tip-over is likely.

If you fail to heed these warnings damage to your chair, a fall, tip-over or loss of control may occur and cause severe injury to the rider or others.

⚠ WARNING

Before you assist a rider, be sure to read the warnings "For Attendants" (p. 12) and follow all instructions that apply. Be aware that you will need to learn safe methods best suited to your abilities.

A. LEARNING TO DO A "WHEELIE"

⚠ WARNING

Follow these steps to help the rider learn to do a "wheelie":

1. Read and follow the warnings for "WHEELIES." (See p. 14)
2. Stand at the rear of the chair. You must be able to move with the chair to prevent a tip-over.
3. Keep your hands BENEATH the push handles, ready to catch the rider if the chair tips back.
4. When you are ready, have the rider place his or her hands on the forward part of the handrims.
5. Have the rider make a quick BACKWARD movement of the rear wheels, quickly followed by a hard FORWARD thrust. (This will tilt the chair up on the balance point of the rear wheels.)
6. Have the rider make small movements of the handrims to stay in balance.

If you fail to heed these warnings damage to your chair, a fall, tip-over or loss of control may occur and cause severe injury to the rider or others.

B. DESCENDING A CURB OR SINGLE STEP

⚠ WARNING

Follow these steps to help a rider descend a curb or single step going BACKWARD:

1. Stay at the rear of the chair.
2. Several feet before your reach the edge of the curb or step, turn the chair around and pull it backward.
3. While looking over your shoulder, carefully step back until you are off the curb or stair and standing on the lower level.
4. Pull the chair toward you until the rear wheels reach the edge of the curb or step. Then allow the rear wheels to slowly roll down onto the lower level.
5. When the rear wheels are safely on the lower level, tilt the chair back to its balance point. This will lift the front casters off the curb or step.
6. Keep the chair in balance and take small steps backward. Turn the chair around and gently lower front casters to the ground.

If you fail to heed these warnings damage to your chair, a fall, tip-over or loss of control may occur and cause severe injury to the rider or others.

C. CLIMBING A CURB OR SINGLE STEP

⚠ WARNING

Follow these steps to help the rider climb a curb or single step going FORWARD:

1. Stay behind the chair.
2. Face the curb and tilt the chair up on the rear wheels so that the front casters clear the curb or step.
3. Move forward, placing the front casters on the upper level as soon as you are sure they are past the edge.
4. Continue forward until the rear wheels contact the face of the curb or step. Lift and roll the rear wheels to the upper level.

If you fail to heed these warnings damage to your chair, a fall, tip-over or loss of control may occur and cause severe injury to the rider or others.

D. CLIMBING STAIRS

⚠ WARNING

1. Use at least two attendants to move a chair and rider up stairs.
2. Move the chair and rider BACKWARD up the stairs.
3. The person at the rear is in control. He or she tilts the chair back to its balance point.
4. A second attendant at the front firmly grasps a non-detachable part of the front frame and lifts the chair up and over one stair at a time.
5. The attendants move to the next stair up. Repeat for each stair, until you reach the landing.

If you fail to heed these warnings damage to your chair, a fall, tip-over or loss of control may occur and cause severe injury to the rider or others.

E. DESCENDING STAIRS

⚠ WARNING

1. Use at least two attendants to move a chair and rider down stairs.
2. Move the chair and rider FORWARD down the stairs.
3. The person at the rear is in control. He or she tilts the chair to the balance point of the rear wheels and rolls it to the edge of the top step.
4. A second attendant stands on the third step from the top and grasps the chair frame. He or she lowers the chair one step at a time by letting the rear wheels roll over the stair edge.
5. The attendants move to the next stair down. Repeat for each stair, until you reach the landing.

If you fail to heed these warnings damage to your chair, a fall, tip-over or loss of control may occur and cause severe injury to the rider or others.

F. MAINTENANCE

⚠ WARNING

1. Inspect and maintain this chair strictly per chart.
2. If you detect a problem, make sure to service or repair the chair before use.
3. At least once a year, have a complete inspection, safety check and service of your chair made by an authorized supplier.

If you fail to heed these warnings damage to your chair, a fall, tip-over or loss of control may occur and cause severe injury to the rider or others. For additional maintenance information see Section XI: Maintenance.

A. ANTI-TIP TUBES (Optional)

⚠ WARNING

Anti-tip tubes can help keep your chair from tipping over backward in most normal conditions.

1. Sunrise Recommends Use Of Anti-Tip Tubes:
   a. UNLESS you are a skilled rider of this chair and are sure you are not at risk to tip over.
   b. Each time you modify or adjust your chair. The change may make it easier to tip backward. Use anti-tip tubes until you adapt to the change, and are sure you are not at risk to tip over.
2. When locked in place (in the "down" position) anti-tip tubes should be BETWEEN 1 1/2 to 2 inches off the ground.
   a. If set too HIGH, they may not prevent a tip-over.
   b. If set too LOW, they may "hang up" on obstacles you can expect in normal use. If this occurs, you may fall or your chair may tip over.
3. Keep Anti-Tip Tubes Locked In Place UNLESS:
   a. You have an attendant; or
   b. You have to climb or descend a curb, or overcome an obstacle, and can safely do so without them. At these times, make sure anti-tip tubes are up, out of the way.

If you fail to heed these warnings damage to your chair, a fall, tip-over or loss of control may occur and cause severe injury to the rider or others.

B. ARMRESTS

⚠ WARNING

Armrests detach and will not bear the weight of this chair.

1. NEVER lift this chair by its armrests. They may come loose or break.
2. Lift this chair only by non-detachable parts of the main frame.

If you fail to heed these warnings damage to your chair, a fall, tip-over or loss of control may occur and cause severe injury to the rider or others.

C. CUSHIONS & SLING SEATS

⚠ WARNING

1. Quickie sling seats and standard foam cushions are not designed for the relief of pressure.
2. If you suffer from pressure sores, or if you are at risk that they will occur, you may need a special seat system or a device to control your posture. Consult your doctor, nurse or therapist to find out if you need such a device for your well-being.

If you fail to heed these warnings damage to your chair, a fall, tip-over or loss of control may occur and cause severe injury to the rider or others.

D. FASTENERS

⚠ WARNING

Many of the screws, bolts and nuts on this chair are special high-strength fasteners. Use of improper fasteners may cause your chair to fail.

1. ONLY use fasteners provided by an authorized supplier (or ones of the same type and strength, as indicated by the markings on the heads).
2. Over- or under-tightened fasteners may fail or cause damage to chair parts.
3. If bolts or screws become loose, tighten them as soon as you can. If you fail to heed these warnings damage to your chair, a fall, tip-over or loss of control may occur and cause severe injury to the rider or others.

If you fail to heed these warnings damage to your chair, a fall, tip-over or loss of control may occur and cause severe injury to the rider or others.

E. FOOTRESTS

⚠ WARNING

1. At the lowest point, footrests should be AT LEAST 2 1/2 INCHES off the ground. If set too LOW, they may "hang up" on obstacles you can expect to find in normal use. This may cause the chair to stop suddenly and tip forward.
2. To Avoid A Trip Or Fall When You Transfer:
   a. Make sure your feet do not "hang up" or get caught in the space between the footrests.
   b. Avoid putting weight on the footrests, as the chair may tip forward.
3. NEVER lift this chair by the footrests. Footrests detach and will not bear the weight of this chair. Lift this chair only by non-detachable parts of the main frame.

If you fail to heed these warnings damage to your chair, a fall, tip-over or loss of control may occur and cause severe injury to the rider or others.

F. PNEUMATIC TIRES

⚠ WARNING

Proper inflation extends the life of your tires and makes your chair easier to use.

1. Do not use this chair if any of the tires is under- or over-inflated. Check weekly for proper inflation level, as listed on the tire sidewall.
2. Low pressure in a rear tire may cause the wheel lock on that side to slip and allow the wheel to turn when you do not expect it.
3. Low pressure in any of the tires may cause the chair to veer to one side and result in a loss of control.
4. Over-inflated tires may burst.

If you fail to heed these warnings damage to your chair, a fall, tip-over or loss of control may occur and cause severe injury to the rider or others.

G. POSITIONING BELTS (Optional)

⚠ WARNING

Use positioning belts ONLY to help support the rider's posture. Improper use of these belts may cause severe injury to or death of the rider.

1. Make sure the rider does not slide down in the wheelchair seat. If this occurs, the rider may suffer chest compression or suffocate due to pressure from the belts.
2. The belts must be snug, but must not be so tight that they interfere with breathing. You should be able to slide your open hand, flat, between the belt and the rider.
3. A pelvic wedge or a similar device can help keep the rider from sliding down in the seat. Consult with the rider's doctor, nurse or therapist to find out if the rider needs such a device.
4. Use positioning belts only with a rider who can cooperate. Make sure the rider can easily remove the belts in an emergency.
5. NEVER Use Positioning Belts:
   a. As a patient restraint. A restraint requires a doctor's order.
   b. On a rider who is comatose or agitated.
   c. As a motor vehicle restraint. In an accident or sudden stop the rider may be thrown from the chair. Wheelchair seat belts will not prevent this, and further injury may result from the belts or straps.

If you fail to heed these warnings damage to your chair, a fall, tip-over, loss of control may occur, or severe injury to the rider or others.

H. POWER DRIVE

⚠ WARNING

Do not install a power drive on any Quickie wheelchair. If you do:

1. It will affect the center of balance of your chair and may cause a fall or tip-over.
2. It will alter the frame and void the warranty.

If you fail to heed these warnings damage to your chair, a fall, tip-over or loss of control may occur and cause severe injury to the rider or others.

I. PUSH HANDLES (Optional)

⚠ WARNING

When you have a attendant, make sure that this chair has push handles.

1. Push handles provide secure points for an attendant to hold the rear of this chair, to prevent a fall or tip-over. Make sure to use push handles when you have an attendant.
2. Check to make sure push handle grips will not rotate or slip off.

If you fail to heed these warnings damage to your chair, a fall, tip-over or loss of control may occur and cause severe injury to the rider or others.

J. QUICK-RELEASE AXLES

⚠ WARNING

1. Do not use this chair UNLESS you are sure that both quick-release rear axles are locked. An unlocked axle may come off during use and cause a fall.
2. An axle is not locked until the quick-release button pops out fully.
   An unlocked axle may come off during use, resulting in a fall, tip-over or loss of control and cause severe injury to the rider or others.

If you fail to heed these warnings damage to your chair, a fall, tip-over or loss of control may occur and cause severe injury to the rider or others.

K. REAR WHEELS

⚠ WARNING

A change in set-up of the rear wheels will affect the center of balance of your chair.

1. The farther you move the rear axles FORWARD, the more likely it is that your chair will tip over backward.
2. Consult your doctor, nurse or therapist to find the best rear axle set-up for your chair. Do not change the set-up UNLESS you are sure you are not at risk to tip over.
3. Adjust the rear wheel locks after you make any change to the rear axles.
   a. If you fail to do so, the locks may not work.
   b. Make sure lock arms embed in tires at least 1/8 inch when locked.

If you fail to heed these warnings damage to your chair, a fall, tip-over or loss of control may occur and cause severe injury to the rider or others.

L. REAR WHEEL LOCKS

⚠ WARNING

Rear wheel locks are NOT designed to slow or stop a moving wheelchair. Use the only to keep the rear wheels from rolling when your chair is at a complete stop.

1. NEVER use rear wheel locks to try to slow or stop your chair when it is moving. Doing so may cause you to veer out of control.
2. To keep the rear wheels from rolling, always set both rear wheel locks when you transfer to or from your chair.
3. Low pressure in a rear tire may cause the wheel lock on that side to slip and may allow the wheel to turn when you do not expect it.
4. Make sure lock arms embed in tires at least 1/8 inch when locked. If you fail to do so, the locks may not work.

If you fail to heed these warnings damage to your chair, a fall, tip-over or loss of control may occur and cause severe injury to the rider or others.

M. MODIFIED SEAT SYSTEMS

⚠ WARNING

Use of a seat system not approved by Sunrise may alter the center of balance of this chair. This may cause the chair to tip over.

1. Do not change the seat system of your chair UNLESS you consult your authorized supplier first.
2. Use of a seat system not approved by Sunrise may affect the folding mechanism of this chair.
3. Use of a seating system not provided by Sunrise is prohibited for transit use.

If you fail to heed these warnings damage to your chair, a fall, tip-over or loss of control may occur and cause severe injury to the rider or others.

N. UPHOLSTERY FABRIC

⚠ WARNING

1. Replace worn or torn fabric of seat and seat back as soon as you can. If you fail to do so, the seat may fail.
2. Sling fabric will weaken with age and use. Look for fraying or thin spots, or stretching of fabrics at rivet holes.
3. "Dropping down" into your chair will weaken fabric and result in the need to inspect and replace the seat more often.
4. Be aware that laundering or excess moisture will reduce flame retardation of the fabric.

If you fail to heed these warnings damage to your chair, a fall, tip-over or loss of control may occur and cause severe injury to the rider or others.

Note: Setting the wheelchair on a table or on a flat surface, such as a table or on a flat surface, such as a workbench, helps make these procedures easier.

Note on Torque Setting: A torque setting is the optimum tightening which should be made on a particular fastener. A torque wrench which measures in./lbs. Should be used when tightening fasteners on Quickie wheelchairs. Unless otherwise noted, use a torque setting of 60 in./lbs. When setting up this wheelchair.

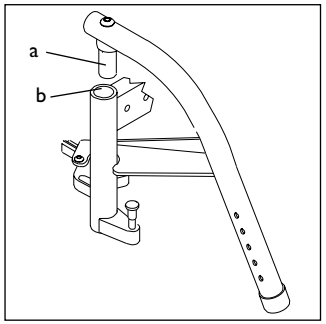

A. SWING-AWAY FOOTRESTS

1. Installation

a. Place swing-away pivot saddle (a) into the receiver (b) on front frame tube with the footrest facing outward from the frame.

b. Rotate the footrest inward until it locks into place on locking bolt.

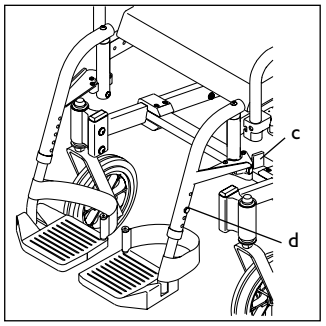

2. Removal

a. To remove footrest, push release latch (c) toward the frame.

b. Rotate footrest outward and lift.

3. Height Adjustment

a. Remove retaining bolt (d) in the frame tube.

b. Position footplate upward or downward in pre-drilled holes on hanger tube.

c. Reinsert bolt and tighten.

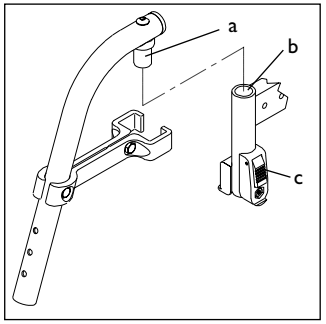

B. HEAVY-DUTY, LIFT-OFF FOOTRESTS (Optional)

1. Installation

Slide pivot saddle (a) into receiver (b) on front frame tube until it locks into place.

2. Removal

a. To remove footrest, push release latch (c) while lifting-up footrest from receiver.

3. Height-Adjustment

a. Loosen the retaining bolt (d) in the footrest mounting bracket.

b. Position footplate upward or downward in pre-drilled holes on hanger tube.

c. Reinsert bolt and tighten.

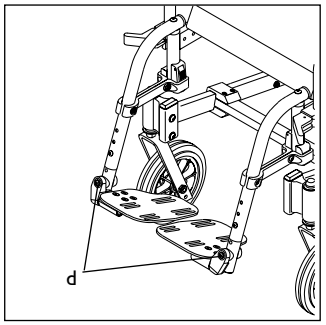

C. ARTICULATING LEGREST (Optional)

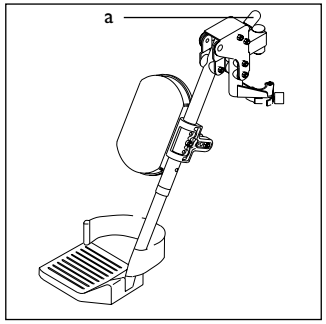

1. Installation

To install or remove Articulating Legrest (ALR) see instructions for Swing-Away Footrests installation.

2. Adjustment

a. To raise legrest, lift to desired position. Legrest will automatically lock in place.

b. To lower, while seated in chair, press release lever (a) forward and lower legrest to desired position. Legrest will automatically lock in place.

D. ELEVATING LEGREST (Optional)

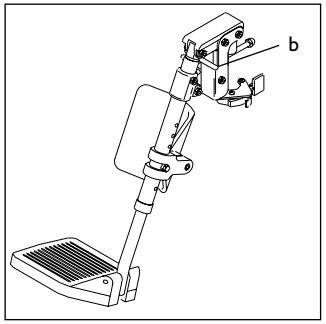

1. Installation

To install or remove Elevating Legrest (ELR) see instructions for Swing-Away Footrests installation.

2. Adjustment

a. To raise legrest, lift to desired position. Legrest will automatically lock in place.

b. To lower, while seated in chair, press release lever (b) forward and lower legrest to desired position. Legrest will automatically lock in place.

E. CASTERS

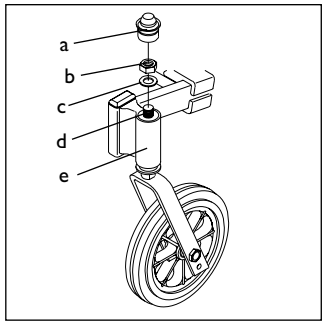

1. Installation

a. Remove dust cover (a) from caster housing. Pry dust cover off using a back and forth motion.

b. Caster assembly holds one nut (b) and one washer (c). Remove nut and washer.

c. Insert caster stem (d) into caster housing (e) and place washer on stem.

d. Replace nut on caster stem and tighten until all play is removed; then loosen approximately 1/8 turn, yet still allowing for free rotation.

e. Replace dust cover to caster housing.

F. DUAL-POST, HEIGHT-ADJUSTABLE ARMRESTS

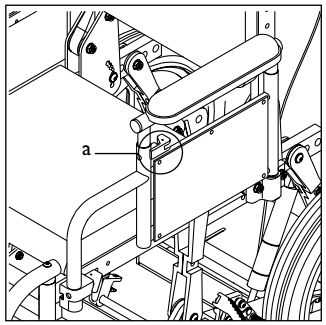

1. Installation or Removal

a. The assembly is held securely in place when the lever (a) is facing forward.

b. Pull back on securing lever.

c. Insert or remove armrest.

d. Return securing lever to locked position.

2. Height-Adjustment

a. Release the upper securing lever (a).

b. Set at desired height.

c. Return securing lever to locked position.

d. Move armrest up or down to allow armrest to snap into place.

G. ADJUSTABLE LOCKING FLIP-UP ARMRESTS (Optional)

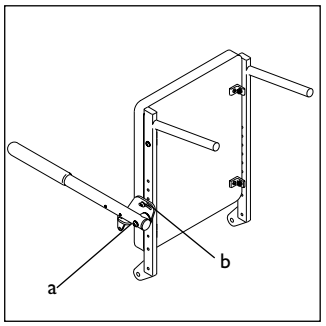

1. Adjustment

a. Loosen clamp bolts (a) and (b).

b. Move clamp and bushing up or down backrest posts to desired position.

c. Tighten bolts.

d. Repeat the process for the other armrest.

2. Angle-Adjustment

a. Loosen bolt (b).

b. Set armrest at desired angle using pre-set holes in armrest angle plate.

c. Tighten bolt.

H. ANTI-TIP TUBES

Anti-tip tubes are recommended for all wheelchairs.

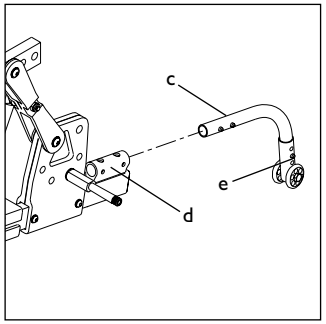

Note: Use a torque setting of 100 in.-lbs. when setting up the anti-tip tubes.

1. Inserting Anti-Tip Tubes Into Receiver

a. Press the rear anti-tip release lever (c) on the anti-tip tube so that both release pins are drawn inside.
b. Insert into the anti-tip tube receiver (d).
c. Turn the anti-tip tube down until release pin is through the receiver mounting hole.
d. Insert second anti-tip tube the same way.

2. Adjusting Anti-Tip Tube Wheel
(available with 20" rear wheels only)

The anti-tip tube wheels may have to be raised or lowered to achieve proper clearance 1 1/2" to 2".

a. Press the anti-tip wheel release button so that both release pins are drawn inside (e).
b. Raise or lower to one of the three predrilled holes.
c. Release button.
d. Adjust the second anti-tip tube wheel the same way.

Important Note: Both wheels should be at exactly the same height.

I. TILT-IN-SPACE MECHANISM

The tilt-in-space mechanism is installed by Sunrise. A cable trigger mechanism positively locks the chair in place from 0° to 45°.

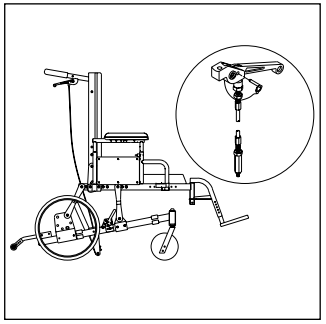

1. Cable Adjustment

a. Loosen the jam nut by turning it clockwise.
b. Turn the cable adjuster until slack is removed from cable.
c. Tighten jam nut.

Important Note: Gas Cylinder. Gas charged cylinder. It is non-repairable. Call an authorized representative if it is not working properly.
DO NOT ATTEMPT TO REMOVE FROM WHEELCHAIR.

J. DUAL TRIGGER RECLINING MECHANISM

The dual trigger reclining mechanism is installed by Sunrise.

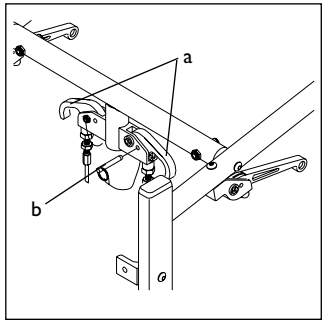

1. To Recline or Raise Backrest

a. Depress both triggers (a) at the same time. Releasing the triggers positively locks the backrest in place within its 90° range.
b. To secure backrest position, insert the locking pin (b) into the trigger holder.

⚠ WARNING

Always lock the dual trigger reclining mechanism securely in place after positioning the backrest.

K. FIXED/ADJUSTABLE BACKREST

The backrest comes with an angle-adjustment range from 16º to 40º.

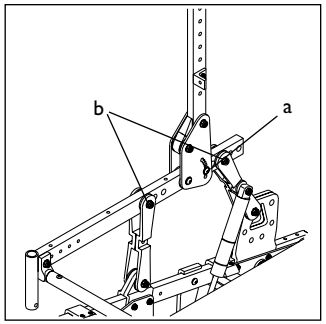

1. Angle-Adjustment

a. Loosen and remove bolt (a)
b. Set backrest at desired angle using preset holes in armrest angle plate.
c. Replace and tighten bolt.
d. Repeat on other side.

Important Note: The adjustment on each side of the chair should be exactly equal.

2. Depth Adjustment

a. Loosen bolts (b) from front and rear linkages.
b. Remove bolt.
c. Reposition linkages on seat frame.
d. Replace bolts and tighten.

L. STROLLER HANDLES (Optional)

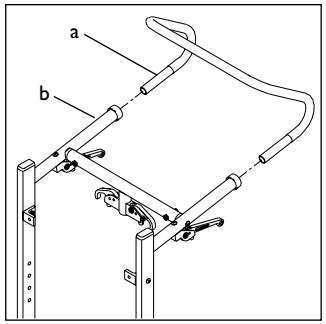

1. Installation

a. Press button (a) on the stroller handle so that release pins are drawn inside the tube.
b. Insert the tube into the back tube receiver (b) and the release pin is through the receiver mounting hole.

M. WHEEL LOCKS

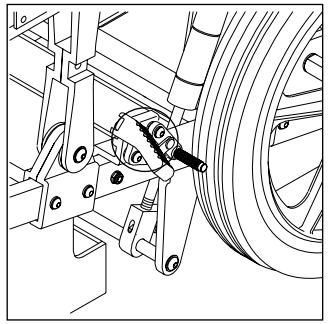

Quickie T45 wheelchairs are standard with wheel locks. Wheel locks are installed by Sunrise unless you have requested otherwise.

Note: Use a torque setting of 100 in./lbs when setting-up wheel locks.

1. Adjustment

a. Loosen the screws on the side of each clamp. Do not attempt to remove one screw at a time.
b. Slide assembly toward rear wheel until clamp embeds into tire to prevent wheel movement, when in locked position.
c. Adjust angle to position.
d. Tighten screws.

N. CHECK-OUT

After the wheelchair is assembled and adjusted, it should roll smoothly and easily. All accessories should also perform smoothly.

If you have any problems, follow these procedures.

1. Review the set-up and check-out section and operating guide to make sure chair was properly prepared.
2. Review troubleshooting guide.
3. If your problem persists, contact your authorized supplier. If you still have a problem after contacting your authorized supplier, contact Sunrise customer service. See the introduction page for details on how to contact your authorized supplier or Sunrise customer service.

You will need to adjust your chair from time to time for best performance (especially if you alter the original settings). This chart gives you a first solution, then a second and a third if needed. You may need to look farther to find the best solution for a specific problem.

Note: To keep track of your progress, make only ONE change at a time.

SYMPTOMS: Left Turn In Chair	Right Turn In Chair	Looseness In Chair	Sluggish Turning	Squeaks And Rattles	Caster Flutter	SOLUTIONS
✓	✓	✓	✓			Make sure tire pressure is correct and equal in both rear tires and front caster tires, if pneumatic.
		✓	✓	✓	✓	Make sure all nuts and bolts are snug. **(Note: Do not overtighten, or aluminum tubes may be damaged).**
		✓		✓		Make sure all spokes and nipples are tight on radial spoke wheels.
				✓		Use Tri-Flow Lubricant (Teflon®-based) between all modular frame connections and parts.
✓	✓		✓		✓	Check for proper caster plate adjustment. See instructions for caster plate adjustment.
	✓					Add a spacer washer between the plastic saddle and the caster plate on the top of the left caster plate.
	✓					Add a spacer washer between the plastic saddle and the caster plate on the top of the right caster plate.
✓						Add a spacer washer between the plastic saddle and the caster plate on the bottom right caster plate retaining bolts.
✓						Add a spacer washer between the plastic saddle and the caster plate on the bottom right caster plate retaining bolts.
✓	✓				✓	Make sure both front casters touch the ground simultaneously. If they do not, add the proper spacers between the bottom bearing of the caster plate and fork stem nut until they do. Make sure you check for this problem on a flat surface.

A. INTRODUCTION

1. Proper maintenance will improve performance and extend the useful life of your chair.
2. Clean your chair regularly. This will help you find loose or worn parts and make your chair easier to use.
3. Repair or replace loose, worn, bent or damaged parts **before using this chair**.
4. To protect your investment, have all major maintenance and repair work done by your authorized supplier.

⚠ WARNING

If you fail to heed these warnings your chair may fail and cause severe injury to the rider or others.

1. Inspect and maintain this chair strictly per chart.
2. If you detect a problem, make sure to service or repair the chair before use.
3. At least once a year, have a complete inspection, safety check and service of your chair made by an authorized supplier.

B. MAINTENANCE CHART

CHECK...	Weekly	3 Months	6 Months	Annually
Tire inflation level	✓			
Wheel locks	✓			
All fasteners for wear and tightness		✓		
Armrests			✓	
Axle and axle sleeves			✓	
Wheels, tires and spokes		✓		
Casters		✓		
Anti-tip tubes		✓		
Frame			✓	
Upholstery		✓		
Service by Authorized Supplier				✓

C. MAINTENANCE TIPS

1. Axles & Axle Receivers:

Check axles and axle sleeves every six months to make sure they are tight. Loose sleeves will damage the axle plate and will affect performance.

2. Tire Air Pressure:

Check air pressure in pneumatic tires at least ONCE A WEEK. The wheel locks will not grip properly if you fail to maintain the air pressure shown on tire sidewall.

D. CLEANING

1. Paint Finish

a. Clean the paint finish with mild soap at least once a month.

b. Protect the paint with a coat of non-abrasive auto wax every three months.

2. Axles and Moving Parts

a. Clean around axles and moving parts WEEKLY with a slightly damp (not wet) cloth.

b. Wipe off or blow away any fluff, dust, or dirt on axles or moving parts.

Note: You do not need to grease or oil the chair.

3. Upholstery

a. Hand-wash (machine washing may damage fabric).

b. Drip-dry only. DO NOT machine dry as heat will damage fabric.

E. STORAGE TIPS

1. Store your chair in a clean, dry area. If you fail to do so, parts may rust or corrode.
2. Before using your chair, make sure it is in proper working order. Inspect and service all items on the "Maintenance Chart." **(See p. 35)**
3. If stored for more than three months, have your chair inspected by an authorized supplier before use.

A. FOR LIFETIME

Sunrise warrants the frame and quick-release axles of this wheelchair against defects in materials and workmanship for the life of the original purchaser. The expected life of this frame is five years.

B. FOR TWO (2) YEARS

We warrant all Sunrise-made parts and components of this wheelchair against defects in materials and workmanship for two years from the date of first consumer purchase.

C. LIMITATIONS

1. We do not warrant:
   - Tires and tubes, upholstery, armrests, push-handle grips, and vinyl coated handrims.
   - Damage from neglect, misuse, or from improper installation or repair.
   - Damage from exceeding weight limit of 200 pounds.
2. This warranty is VOID if the original chair serial number tag is removed or altered.
3. This warranty applies in the USA only. Check with your supplier to find out if international warranties apply.

D. WHAT WE WILL DO

1. Our sole liability is to repair or replace covered parts. This is the exclusive remedy for consequential damages.

E. WHAT YOU MUST DO

1. Obtain from us, while this warranty is in effect, prior approval for return or repair of covered parts.
2. Return the wheelchair or part(s), freight pre-paid, to Sunrise Mobility Products Division at: 2842 Business Park Avenue, Fresno, CA 93727-1328.
3. Pay the cost of labor to repair, remove or install parts.

F. NOTICE TO CONSUMER

1. If allowed by law, this warranty is in place of any other warranty (written or oral, express or implied, including a warranty of merchantability, or fitness for a particular purpose).
2. This warranty gives you certain legal rights. You may also have other rights that vary from state to state.

NOTES

Sunrise Medical Home Healthcare Group
Mobility Products Division

7477 East Dry Creek Parkway • Longmont, Colorado • 80503 USA
(303) 218-4500 or (800) 456-8165
In Canada (800) 263-3390

© 1998, Sunrise Medical 5.98
930356 Rev. B